4 HOLES KEYED K WITH EUROPEAN FLANGED PORT TANDEM GEAR PUMP

4 DELİKLİ KAMALI K ADAPTÖRLÜ TANDEM DİŞLİ POMPA

HİDROLİK SEMBOL
HYDRAULIC SYMBOL

Fluid	Mineral or synthetic compatible with the following seals: NBR, FKM, FPM, Nylon				
Kinematic viscosity suggested	Average ambient temp. (°C)	< -10	-10÷10	10÷35	> 35
	VG (cSt = mm2/s)	22	32	46	68
Optimale kinematic viscosity			VG= 10 cSt ÷ 100 cSt		
Max kinematic viscosity suggested at the start-up			VG= 750 cSt		
Viscosity index suggested VI > 100		Working temperature -15°C +100°C			
Oil filtering			> 200 bar: 10 µm < 200 bar: 25 µm		
Inlet pressure			-0,3 ÷ 2 bar		

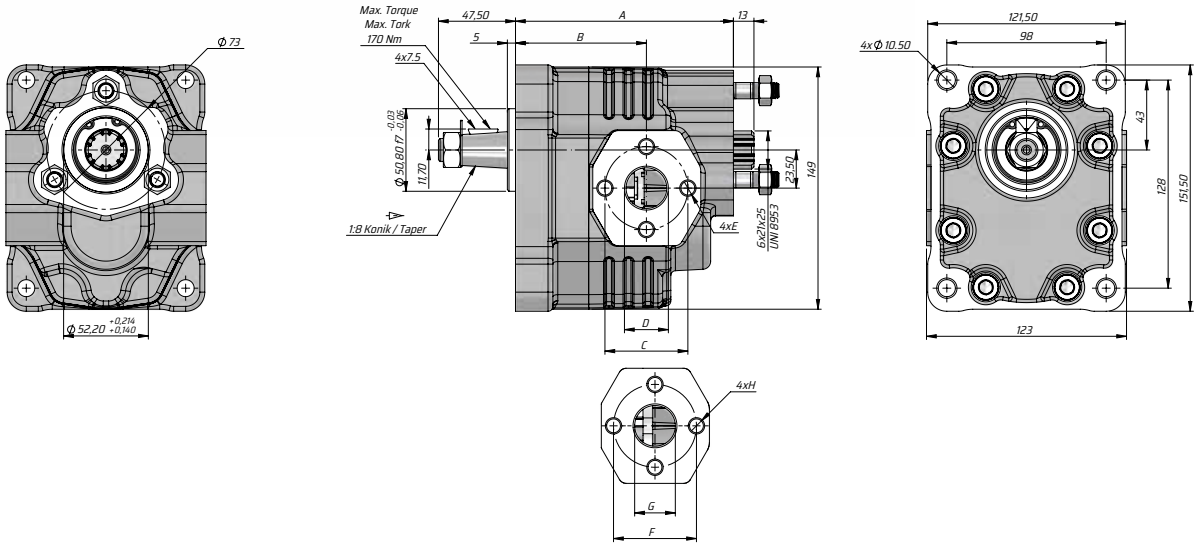

Kod Code		İletim hacmi Displacement	Max. Sürekli Basıncı Max. Continuous pressure	Maks. Aralıklı Basınç Max. Intermittent Pressure	Maks. Anlık Basınç Max. Peak Pressure	Maks. Sürekli Hız Max. Continuous Speed	Maks. Aralıklı Hız Max. Intermittent Speed	Min. Hız Min. Speed	A	B	Giriş Inlet			Çıkış Outlet		
Sol/Left	Sağ/Right	(cm³/rev)	(100%)(BAR)	(20 sec.max)(BAR)	(6 sec.max)(BAR)	(RPM)	(RPM)	(RPM)	(mm)	(mm)	C	D	E	F	G	H
GT30034KK612	GT30034KK622	34	280	300	310	2200	2800	300	134	80,5	51	25	M10	51	25	M10
GT30036KK612	GT30036KK622	36							135,5							
GT30038KK612	GT30038KK622	38							135,5							
GT30043KK612	GT30043KK622	43	270	290	300	2000	2500		140							