4 DELİKLİ ASAE-L ÇİFT YÖNLÜ DİŞLİ MOTOR

HİDROLİK SEMBOL
HYDRAULIC SYMBOL

Fluid	Mineral or synthetic compatible with the following seals: NBR, FKM, FPM, Nylon				
Kinematic viscosity suggested	Average ambient temp. (°C)	< -10	-10÷10	10÷35	> 35
	VG (cSt = mm2/s)	22	32	46	68
Optimale kinematic viscosity			VG= 10 cSt ÷ 100 cSt		
Max kinematic viscosity suggested at the start-up			VG= 750 cSt		
Viscosity index suggested VI > 100		Working temperature -15°C +100°C			
Oil filtering			> 200 bar: 10 µm < 200 bar: 25 µm		
Inlet pressure			-0,3 ÷ 2 bar		

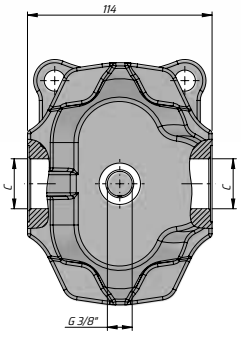

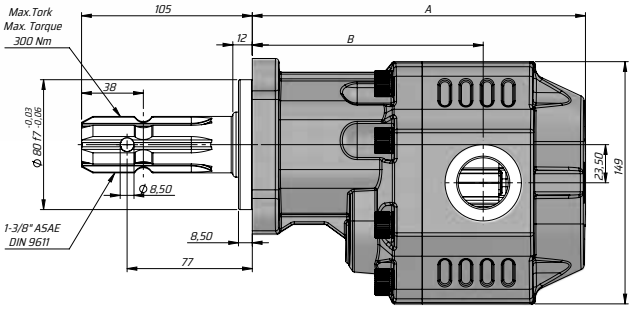

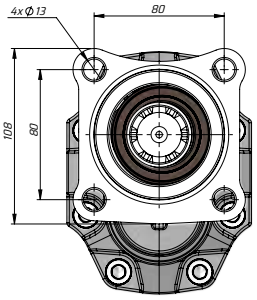

Kod Code	İletim hacmi Displacement	Max. Sürekli Basıncı Max. Continuous pressure	Maks. Aralıklı Basınç Max. Intermittent Pressure	Maks. Anlık Basınç Max. Peak Pressure	Maks. Sürekli Hız Max. Continuous Speed	Maks. Aralıklı Hız Max.Intermittent Speed	Min. Hız Min. Speed	A	B	Giriş Inlet	Çıkış Outlet
BD	(cm³/rev)	(100%)(BAR)	(20 sec.max)(BAR)	(6 sec.max)(BAR)	(RPM)	(RPM)	(RPM)	(mm)	(mm)	C	C
GM30017SF831	17	290	315	325	2500	3000	300	173	124.5	G1/2"	G1/2"
GM30022FK431	22							177	126		
GM30027SF831	27							179	129.5		
GM30034SF831	34	280	300	310	2200	2800		184	130.5	G3/4"	G3/4"
GM30043SF831	43	270	290	300	2000	2500		190	135.5		
GM30051SF831	51	240	260	280				195	135.5		
GM30061SF831	61	220	240	250	1900			205	142	G1"	G1"
GM30073SF831	73	205	225	230				208	144.5		
GM30082SF831	82							214	146		
GM30100SF831	100	180	200	220	1500	1800		227	160	G1 1/4"	G1 1/4"
GM30125SF831	125	160	180	200				243	164		