KAZEL HYDRAULIC EQUIPMENTS

2+4 DELİKLİ SAE B 13 DİŞ TEK YÖNLÜ DİŞLİ POMPA

HİDROLİK SEMBOL
HYDRAULIC SYMBOL

Fluid	Mineral or synthetic compatible with the following seals: NBR, FKM, FPM, Nylon				
Kinematic viscosity suggested	Average ambient temp. (°C)	< -10	-10÷10	10÷35	> 35
	VG (cSt = mm2/s)	22	32	46	68
Optimale kinematic viscosity			VG= 10 cSt ÷ 100 cSt		
Max kinematic viscosity suggested at the start-up			VG= 750 cSt		
Viscosity index suggested VI > 100		Working temperature -15°C +100°C			
Oil filtering			> 200 bar: 10 µm < 200 bar: 25 µm		
Inlet pressure			-0,3 ÷ 2 bar		

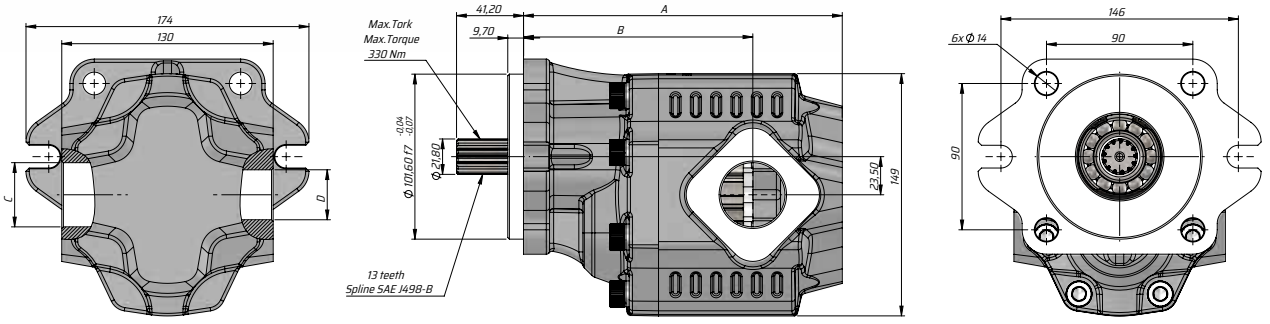

Kod Code		**İletim hacmi** Displacement	**Max. Sürekli Basıncı** Max. Continuous pressure	**Maks. Aralıklı Basınç** Max. Intermittent Pressure	**Maks. Anlık Basınç** Max. Peak Pressure	**Maks. Sürekli Hız** Max. Continuous Speed	**Maks. Aralıklı Hız** Max.Intermittent Speed	**Min. Hız** Min. Speed	**A**	**B**	**Sol**/Left-**Sağ**/Right **Giriş** Inlet	**Çıkış** Outlet
Sol/Left	Sağ/Right	(cm³/rev)	(100%)(BAR)	(20 sec.max)(BAR)	(6 sec.max)(BAR)	(RPM)	(RPM)	RPM	(mm)	(mm)	C	D
G30027BF518	G30027BF528	27	290	315	325	2500	3000	300	166	118	G3/4"	G1/2"
G30034BF518	G30034BF528	34	280	300	310	2200	2800		171	123		G3/4"
G30038BF518	G3003BBF528	38							174	126		
G30043BF518	G30043BF528	43	270	290	300	2000	2500		177	129		
G30051BF518	G30051BF528	51	240	260	280				182	126	G1"	
G30055BF518	G30055BF528	55	230	250	275				185	130		
G30061BF518	G30061BF528	61	220	240	250	1900			188	133		
G30073BF518	G30073BF528	73	205	225	230	1900			196	141	G1 1/4"	G1"