# 2+4 DELİKLİ SAE B 15 DİŞ DİŞLİ POMPA

HİDROLİK SEMBOL
HYDRAULIC SYMBOL

| | | | | | |
|---|---|---|---|---|---|
| Fluid | Mineral or synthetic compatible with the following seals: NBR, FKM, FPM, Nylon | | | | |
| Kinematic viscosity suggested | Average ambient temp. (°C) | < -10 | -10÷10 | 10÷35 | > 35 |
| | VG (cSt = mm2/s) | 22 | 32 | 46 | 68 |
| Optimale kinematic viscosity | | | VG= 10 cSt ÷ 100 cSt | | |
| Max kinematic viscosity suggested at the start-up | | | VG= 750 cSt | | |
| Viscosity index suggested VI > 100 | | Working temperature -15°C +100°C | | | |
| Oil filtering | | | > 200 bar: 10 µm<br>< 200 bar: 25 µm | | |
| Inlet pressure | | | -0,3 ÷ 2 bar | | |

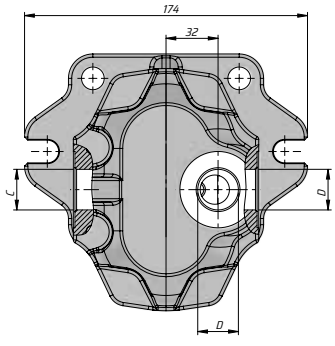


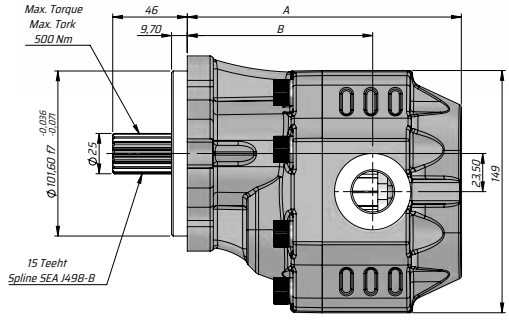


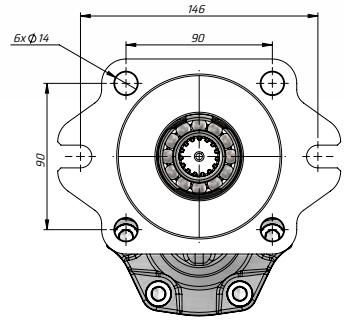


| Kod Code | | İletim hacmi Displacement | Max. Sürekli Basıncı Max. Continuous pressure | Maks. Aralıklı Basınç Max. Intermittent Pressure | Maks. Anlık Basınç Max. Peak Pressure | Maks. Sürekli Hız Max. Continuous Speed | Maks. Aralıklı Hız Max.Intermittent Speed | Min. Hız Min. Speed | A | B | Gi-riş Inlet | Çıkış Outlet |
|---|---|---|---|---|---|---|---|---|---|---|---|---|
| Sol/Left | Sağ/Right | (cm³/rev) | (100%)(BAR) | (20 sec.max)(BAR) | (6 sec.max)(BAR) | (RPM) | (RPM) | RPM | (mm) | (mm) | C | D |
| G30017BF611 | G30017BF621 | 17 | 290 | 315 | 325 | 2500 | 3000 | 300 | 151.5 | 103 | G1/2" | G1/2" |
| G30022BF611 | G30022BF621 | 22 | | | | | | | 155.5 | 104.5 | G3/4" | |
| G30027BF611 | G30027BF621 | 27 | | | | | | | 157.5 | 108 | | |
| G30034BF611 | G30034BF621 | 34 | 280 | 300 | 310 | 2200 | 2800 | | 162.5 | 109 | | G3/4" |
| G30043BF611 | G30043BF621 | 43 | 270 | 290 | 300 | 2000 | 2500 | | 168.5 | 114 | | |
| G30051BF611 | G30051BF621 | 51 | 240 | 260 | 280 | | | | 173.5 | 114 | G1" | |
| G30061BF611 | G30061BF621 | 61 | 220 | 240 | 250 | 1900 | | | 183.5 | 120.5 | | |
| G30073BF611 | G30073BF621 | 73 | 205 | 225 | 230 | | | | 186.5 | 123 | G1 1/4" | G1" |
| G30082BF611 | G30082BF621 | 82 | | | | | | | 192.5 | 124.5 | G1 1/4" | G1"<br>G3/4"<br>(Alternative) |
| G30100BF611 | G30100BF621 | 100 | 180 | 200 | 220 | 1500 | 1800 | | 205.5 | 138.5 | | |
| G30125BF611 | G30125BF621 | 125 | 160 | 180 | 200 | | | | 221.5 | 142.5 | | |