6 HOLES UNI PISTON PUMP

6 DELİKLİ UNI PİSTONLU POMPA

HİDROLİK SEMBOL
HYDRAULIC SYMBOL

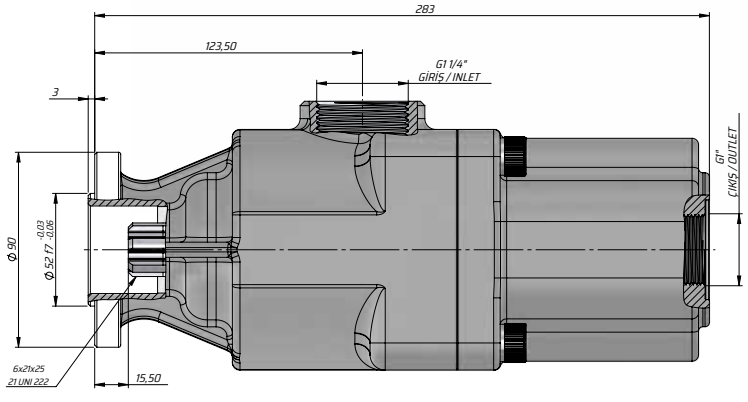

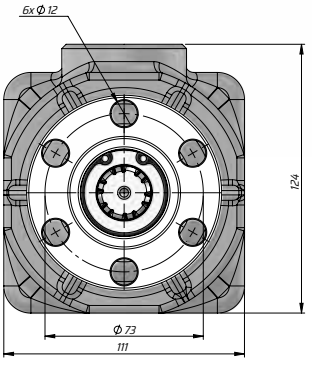

Kod Code	İletim Hacmi Displacement	Maks. Sürekli Basınç Max. Continuous Pressure	Maks. Aralıklı Basınç Max.Intermittent pressure	Maks. Anlık Basınç Max. Peak Pressure	Maks. Sürekli Hız Max. Continuous speed	Maks.Aralıklı Hız Max. Intermittent speed	Min. Hız Min.speed
	(cm³/rev)	(100%)(BAR)	(20 sec.max)(BAR)	(6 sec.max)(BAR)	(RPM)	(RPM)	(RPM)
P0820UF431	20	350	370	400	1800	300	300
P0826UF431	26						
P0834UF431	34						
P0842UF431	42						
P0846UF431	46						
P0852UF431	52						
P0855UF431	55	300	320	350	1500		
P0860UF431	60						