2+4 DELİKLİ SAE C 14 DİŞ TANDEM DİŞLİ MOTOR

HİDROLİK SEMBOL
HYDRAULIC SYMBOL

Fluid	Mineral or synthetic compatible with the following seals: NBR, FKM, FPM, Nylon				
Kinematic viscosity suggested	Average ambient temp. (°C)	< -10	-10÷10	10÷35	> 35
	VG (cSt = mm2/s)	22	32	46	68
Optimale kinematic viscosity			VG= 10 cSt ÷ 100 cSt		
Max kinematic viscosity suggested at the start-up			VG= 750 cSt		
Viscosity index suggested VI > 100		Working temperature -15°C +100°C			
Oil filtering			> 200 bar: 10 µm < 200 bar: 25 µm		
Inlet pressure			-0,3 ÷ 2 bar		

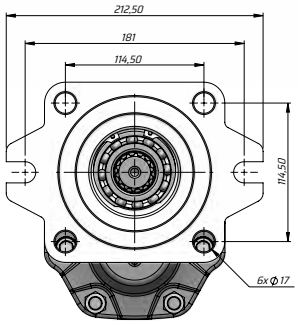

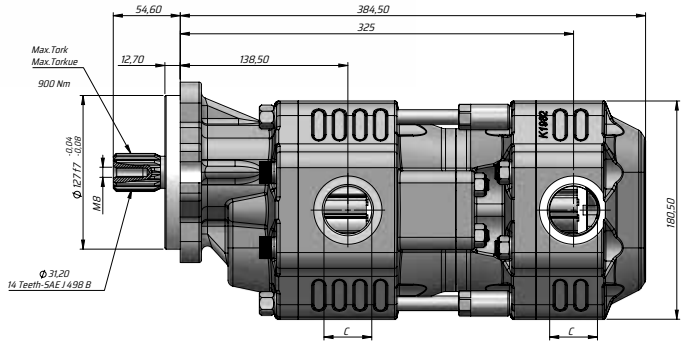

Kod Code	İletim hacmi Displacement	Max. Sürekli Basıncı Max. Continuous pressure	Maks. Aralıklı Basınç Max. Intermittent Pressure	Maks. Anlık Basınç Max. Peak Pressure	Maks. Sürekli Hız Max. Continuous Speed	Maks. Aralıklı Hız Max. Intermittent Speed	Min. Hız Min. Speed	Giriş Inlet	Çıkış Outlet
BD	(cm³/rev)	(100%)(BAR)	(20 sec.max)(BAR)	(6 sec.max)(BAR)	(RPM)	(RPM)	(RPM)	C	C
GT40133CF10334073	73.10	280	300	315	1800	2700	300	G1 1/4"	G1 1/4"
	132.95	220	250	260	1500	2500			