4 HOLES SAE C 16 TEETH TANDEM GEAR PUMP

4 DELİKLİ SAE C 16 DİŞ TANDEM DİŞLİ POMPA

HİDROLİK SEMBOL
HYDRAULIC SYMBOL

Fluid	Mineral or synthetic compatible with the following seals: NBR, FKM, FPM, Nylon				
Kinematic viscosity suggested	Average ambient temp. (°C)	< -10	-10÷10	10÷35	> 35
	VG (cSt = mm2/s)	22	32	46	68
Optimale kinematic viscosity			VG= 10 cSt ÷ 100 cSt		
Max kinematic viscosity suggested at the start-up			VG= 750 cSt		
Viscosity index suggested VI > 100			Working temperature -15°C +100°C		
Oil filtering			> 200 bar: 10 µm < 200 bar: 25 µm		
Inlet pressure			-0,3 ÷ 2 bar		

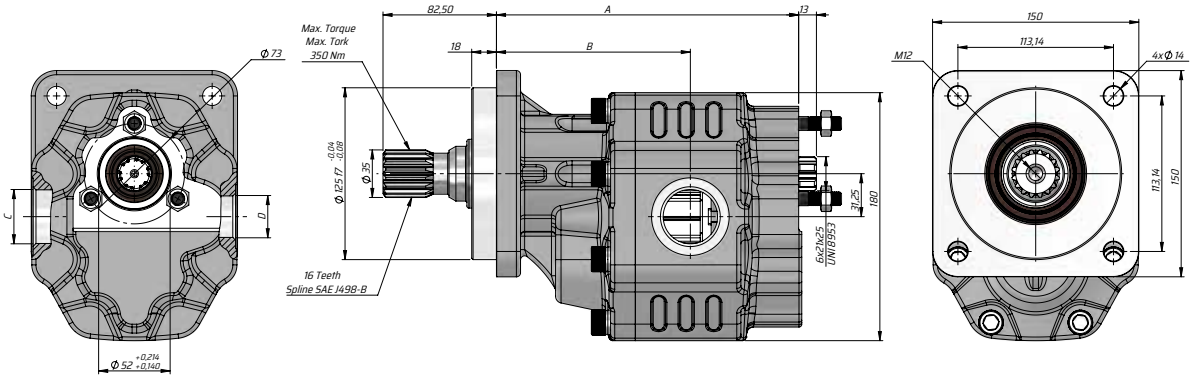

Kod Code		İletim hacmi Displacement	Max. Sürekli Basıncı Max. Continuous pressure	Maks. Aralıklı Basınç Max. Intermittent Pressure	Maks. Anlık Basınç Max. Peak Pressure	Maks. Sürekli Hız Max. Continuous Speed	Maks. Aralıklı Hız Max. Intermittent Speed	Min. Hız Min. Speed	A	B	Giriş Inlet	Çıkış Outlet
Sol / Left	Sağ /Right	(cm³/rev)	(100%)(BAR)	(20 sec.max)(BAR)	(6 sec.max)(BAR)	(RPM)	(RPM)	(RPM)	(mm)	(mm)	C	D
GT40063RF911	GT40063RF921	63	290	315	325	1800	2700	300	203	131	G1"	G3/4"
GT40073RF911	GT40073RF921	73	280	300	315				207	131		
GT40087RF911	GT40087RF921	87	260	280	290				212	135	G1 1/4"	G1"
GT40109RF911	GT40109RF921	109	250	270	280				220	141		
GT40133RF911	GT40133RF921	133	220	250	260	1500	2500		229	142	G1 1/2"	
GT40151RF911	GT40151RF921	151	180	210	220				235	144.5		