2+4 DELİKLİ SAE C 14 DİŞ TANDEM DİŞLİ POMPA

HİDROLİK SEMBOL
HYDRAULIC SYMBOL

Fluid	Mineral or synthetic compatible with the following seals: NBR, FKM, FPM, Nylon				
Kinematic viscosity suggested	Average ambient temp. (°C)	< -10	-10÷10	10÷35	> 35
	VG (cSt = mm2/s)	22	32	46	68
Optimale kinematic viscosity			VG= 10 cSt ÷ 100 cSt		
Max kinematic viscosity suggested at the start-up			VG= 750 cSt		
Viscosity index suggested VI > 100		Working temperature -15°C +100°C			
Oil filtering			> 200 bar: 10 µm < 200 bar: 25 µm		
Inlet pressure			-0,3 ÷ 2 bar		

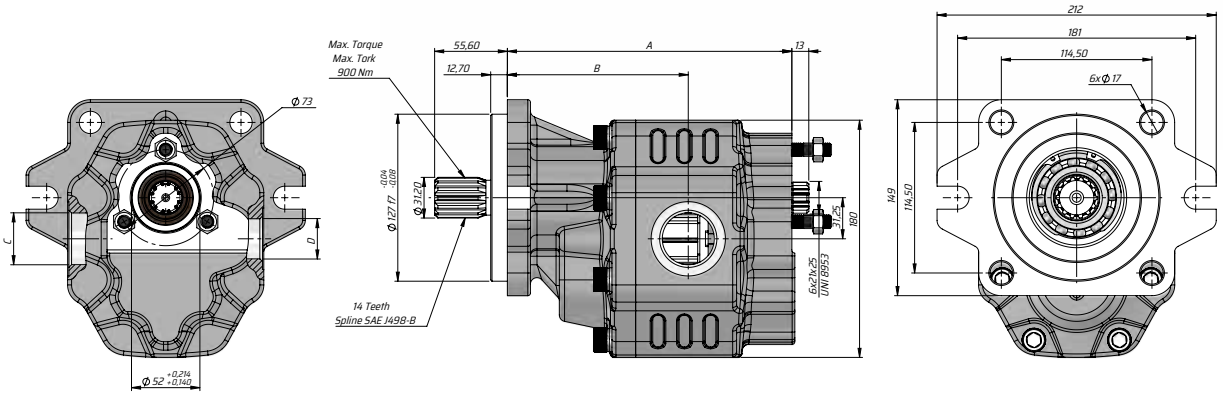

Kod Code		İletim hacmi Displacement	Max. Sürekli Basıncı Max. Continuous pressure	Maks. Aralıklı Basınç Max. Intermittent Pressure	Maks. Anlık Basınç Max. Peak Pressure	Maks. Sürekli Hız Max. Continuous Speed	Maks. Aralıklı Hız Max. Intermittent Speed	Min. Hız Min. Speed	A	B	Giriş Inlet	Çıkış Outlet
Sol / Left	Sağ /Right	(cm³/rev)	(100%)(BAR)	(20 sec.max)(BAR)	(6 sec.max)(BAR)	(RPM)	(RPM)	(RPM)	(mm)	(mm)	C	D
GT40063CF1011	GT40063CF1021	63	290	315	325	1800	2700	300	199	127.5	G1"	G3/4"
GT40073CF1011	GT40073CF1021	73	280	300	315				203	127.5		
GT40087CF1011	GT40087CF1021	87	260	280	290				208	131.5	G1 1/4"	G1"
GT40109CF1011	GT40109CF1021	109	250	270	280				216	137.5		
GT40133CF1011	GT40133CF1021	133	220	250	260	1500	2500		225	138.5	G1 1/2"	
GT40151CF1011	GT40151CF1021	155	180	210	220				231	141		