2+4 DELİKLİ SAE C 14 DİŞ DİŞLİ MOTOR

HİDROLİK SEMBOL
HYDRAULIC SYMBOL

Fluid	Mineral or synthetic compatible with the following seals: NBR, FKM, FPM, Nylon				
Kinematic viscosity suggested	Average ambient temp. (°C)	< -10	-10÷10	10÷35	> 35
	VG (cSt = mm2/s)	22	32	46	68
Optimale kinematic viscosity			VG= 10 cSt ÷ 100 cSt		
Max kinematic viscosity suggested at the start-up			VG= 750 cSt		
Viscosity index suggested VI > 100		Working temperature -15°C +100°C			
Oil filtering			> 200 bar: 10 µm < 200 bar: 25 µm		
Inlet pressure			-0,3 ÷ 2 bar		

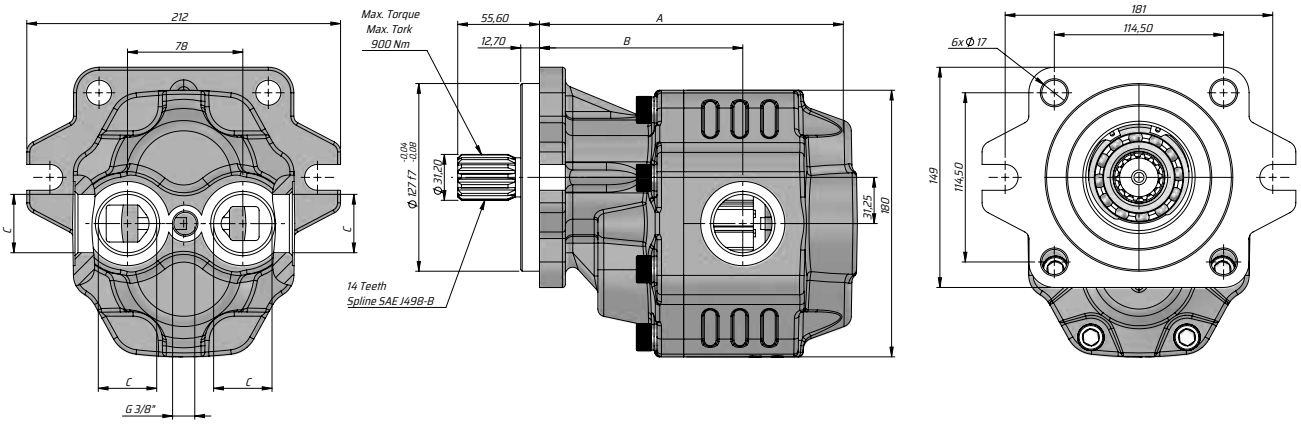

Kod Code	İletim hacmi Displacement	Max. Sürekli Basıncı Max. Continuous pressure	Maks. Aralıklı Basınç Max. Intermittent Pressure	Maks. Anlık Basınç Max. Peak Pressure	Maks. Sürekli Hız Max. Continuous Speed	Maks. Aralıklı Hız Max. Intermittent Speed	Min. Hız Min. Speed	A	B	Giriş Inlet	Çıkış Outlet
BD	(cm³/rev)	(100%)(BAR)	(20 sec.max)(BAR)	(6 sec.max)(BAR)	(RPM)	(RPM)	(RPM)	(mm)	(mm)	C	C
GM40063CF1035	63	290	315	325	1800	2700	300	188.5	127.5	G1"	
GM40073CF1035	73	280	300	315				192.5	127.5		
GM40087CF1035	87	260	280	290				197.5	131.5		
GM40109CF1035	109	250	270	280				205.5	137.5	G1 1/4"	
GM40116CF1035	116	240	260	270	1500			205.5	137.5		
GM40133CF1035	133	220	250	260		2500		214.5	138.5		
GM40151CF1035	155	180	210	220				220.5	141		