4 DELİKLİ ASAE-L DİŞLİ MOTOR

HİDROLİK SEMBOL
HYDRAULIC SYMBOL

Fluid	Mineral or synthetic compatible with the following seals: NBR, FKM, FPM, Nylon				
Kinematic viscosity suggested	Average ambient temp. (°C)	< -10	-10÷10	10÷35	> 35
	VG (cSt = mm2/s)	22	32	46	68
Optimale kinematic viscosity			VG= 10 cSt ÷ 100 cSt		
Max kinematic viscosity suggested at the start-up			VG= 750 cSt		
Viscosity index suggested VI > 100			Working temperature -15°C +100°C		
Oil filtering			> 200 bar: 10 µm < 200 bar: 25 µm		
Inlet pressure			-0,3 ÷ 2 bar		

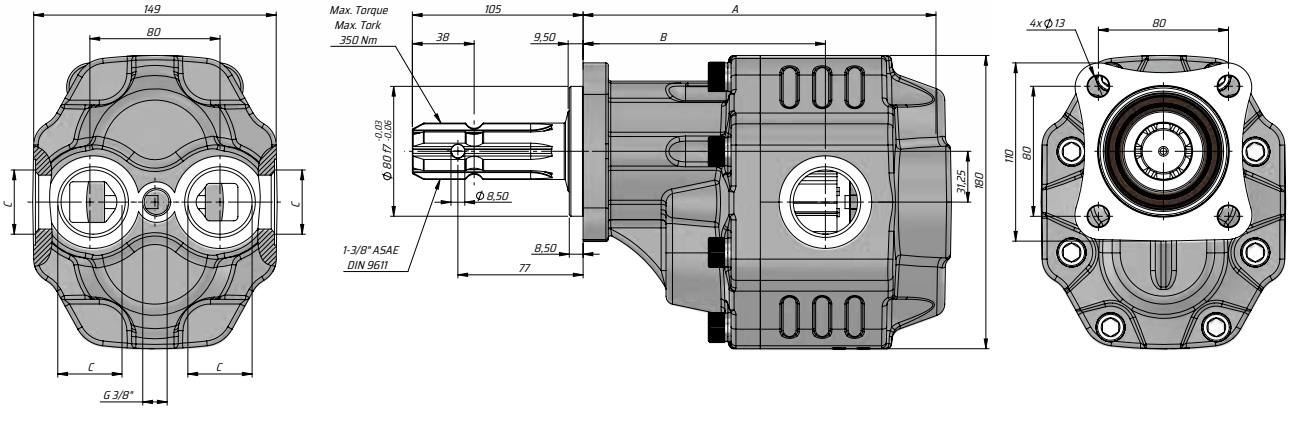

Kod Code	İletim hacmi Displacement	Max. Sürekli Basıncı Max. Continuous pressure	Maks. Aralıklı Basınç Max. Intermittent Pressure	Maks. Anlık Basınç Max. Peak Pressure	Maks. Sürekli Hız Max. Continuous Speed	Maks. Aralıklı Hız Max. Intermittent Speed	Min. Hız Min. Speed	A	B	Giriş Inlet	Çıkış Outlet
BD	(cm³/rev)	(100%)(BAR)	(20 sec.max)(BAR)	(6 sec.max)(BAR)	(RPM)	(RPM)	(RPM)	(mm)	(mm)	C	C
GM400635F835	63	290	315	325	1800	2700	300	200	139	G1"	
GM400735F835	73	280	300	315				204	139		
GM400875F835	87	260	280	290				209	144		
GM401095F835	109	250	270	280				217	149	G1 1/4"	
GM401165F835	116	240	260	270	1500			217	149		
GM401335F835	133	220	250	260		2500		226	150		
GM401515F835	151	180	210	220				232	153		