4 DELİKLİ TRC ÇİFT YÖNLÜ DİŞLİ POMPA

HİDROLİK SEMBOL
HYDRAULIC SYMBOL

Fluid	Mineral or synthetic compatible with the following seals: NBR, FKM, FPM, Nylon				
Kinematic viscosity suggested	Average ambient temp. (°C)	< -10	-10÷10	10÷35	> 35
	VG (cSt = mm2/s)	22	32	46	68
Optimale kinematic viscosity			VG= 10 cSt ÷ 100 cSt		
Max kinematic viscosity suggested at the start-up			VG= 750 cSt		
Viscosity index suggested VI > 100		Working temperature -15°C +100°C			
Oil filtering			> 200 bar: 10 µm < 200 bar: 25 µm		
Inlet pressure			-0,3 ÷ 2 bar		

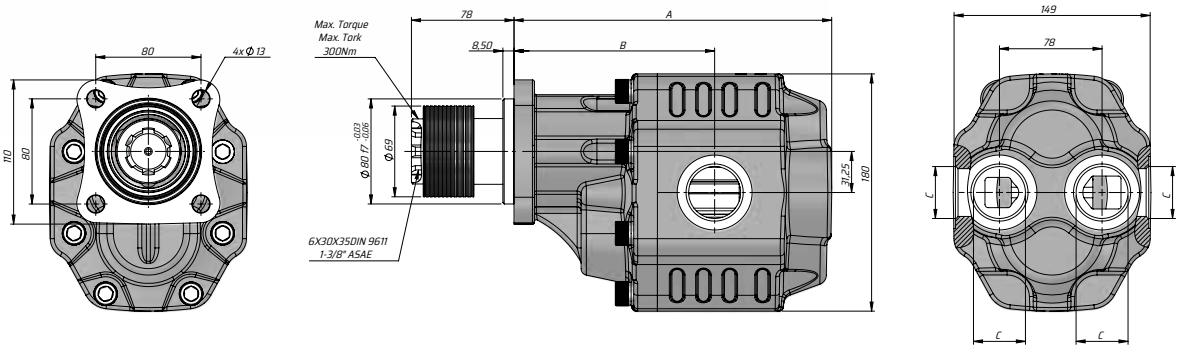

Kod Code	İletim hacmi Displacement	Max. Sürekli Basıncı Max. Continuous pressure	Maks. Aralıklı Basınç Max. Intermittent Pressure	Maks. Anlık Basınç Max. Peak Pressure	Maks. Sürekli Hız Max. Continuous Speed	Maks. Aralıklı Hız Max. Intermittent Speed	Min. Hız Min. Speed	A	B	Giriş Inlet	Çıkış Outlet
BD	(cm³/rev)	(100%)(BAR)	(20 sec.max)(BAR)	(6 sec.max)(BAR)	(RPM)	(RPM)	(RPM)	(mm)	(mm)	C	C
G40063SF335	63	290	315	325	1800	2700	300	209.5	139	G1"	
G40073SF335	73	280	300	315				213.5	139		
G40087SF335	87	260	280	290				218.5	144		
G40109SF335	109	250	270	280				226.5	149	G1 1/4"	
G40116SF335	116	240	260	270	1500			149	149		
G40133SF335	133	220	250	260		2500		150	150		
G40151SF335	151	180	210	220				241.5	153		