2+4 DELİKLİ SAE C KAMALI DİŞLİ POMPA

HİDROLİK SEMBOL
HYDRAULIC SYMBOL

Fluid	Mineral or synthetic compatible with the following seals: NBR, FKM, FPM, Nylon				
Kinematic viscosity suggested	Average ambient temp. (°C)	< -10	-10÷10	10÷35	> 35
	VG (cSt = mm2/s)	22	32	46	68
Optimale kinematic viscosity			VG= 10 cSt ÷ 100 cSt		
Max kinematic viscosity suggested at the start-up			VG= 750 cSt		
Viscosity index suggested VI > 100		Working temperature -15°C +100°C			
Oil filtering			> 200 bar: 10 µm < 200 bar: 25 µm		
Inlet pressure			-0,3 ÷ 2 bar		

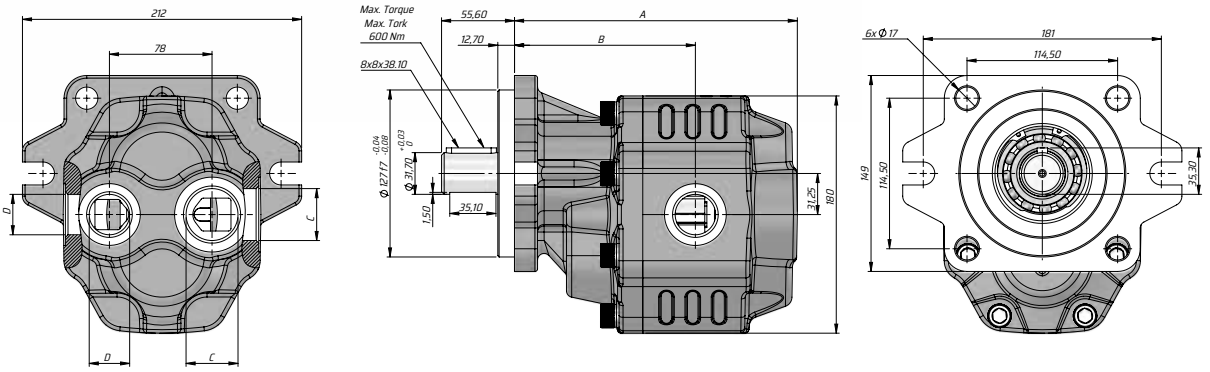

Kod Code		İletim hacmi Displacement	Max. Sürekli Basıncı Max. Continuous pressure	Maks. Aralıklı Basınç Max. Intermittent Pressure	Maks. Anlık Basınç Max. Peak Pressure	Maks. Sürekli Hız Max. Continuous Speed	Maks. Aralıklı Hız Max. Intermittent Speed	Min. Hız Min. Speed	A	B	Giriş Inlet	Çıkış Outlet
Sol / Left	Sağ /Right	(cm³/rev)	(100%)(BAR)	(20 sec.max)(BAR)	(6 sec.max)(BAR)	(RPM)	(RPM)	(RPM)	(mm)	(mm)	C	D
G40063CK1115	G40063CK1125	63	290	315	325	1800	2700	300	198	127.5	G1"	G3/4"
G40073CK1115	G40073CK1125	73	280	300	315				202	127.5		
G40087CK1115	G40087CK1125	87	260	280	290				207	133	G1 1/4"	G1"
G40109CK1115	G40109CK1125	109	250	270	280				215	137.5		
G40116CK115	G40116CK1125	116	240	260	270	1500			215	137.5		
G40133CK1115	G40133CK1125	133	220	250	260		2500		224	138.5	G1 1/2"	
G40151CK1115	G40151CK1125	151	180	210	220				230	141		