4 HOLES ASAE-L BI-DIRECTIONAL GEAR PUMP

4 DELİKLİ ASAE-L ÇİFT YÖNLÜ DİŞLİ POMPA

HİDROLİK SEMBOL
HYDRAULIC SYMBOL

Fluid	Mineral or synthetic compatible with the following seals: NBR, FKM, FPM, Nylon				
Kinematic viscosity suggested	Average ambient temp. (°C)	< -10	-10÷10	10÷35	> 35
	VG (cSt = mm2/s)	22	32	46	68
Optimale kinematic viscosity			VG= 10 cSt ÷ 100 cSt		
Max kinematic viscosity suggested at the start-up			VG= 750 cSt		
Viscosity index suggested VI > 100		Working temperature -15°C +100°C			
Oil filtering			> 200 bar: 10 µm < 200 bar: 25 µm		
Inlet pressure			-0,3 ÷ 2 bar		

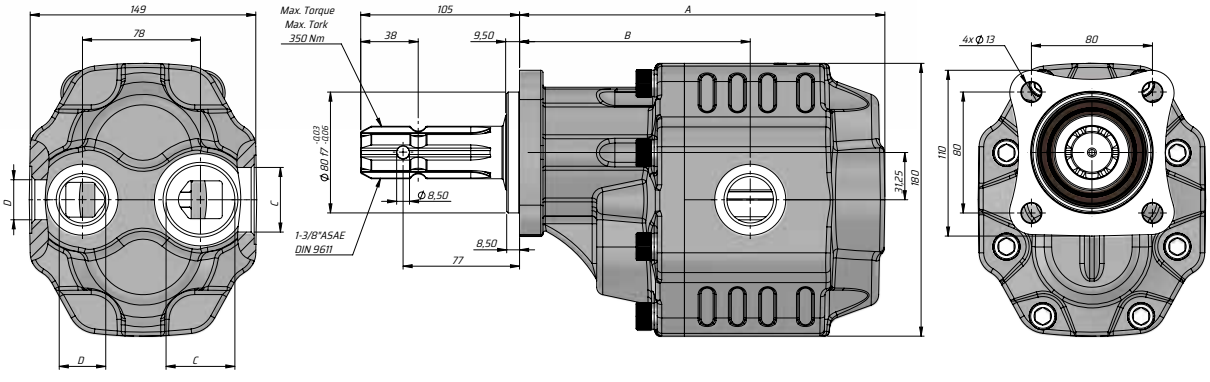

Kod Code		İletim hacmi Displace-ment	Max. Sürekli Basıncı Max. Continu-ous pressure	Maks. Aralıklı Basınç Max. Intermit-tent Pressure	Maks. Anlık Basınç Max. Peak Pressure	Maks. Sürekli Hız Max. Continuous Speed	Maks. Aralıklı Hız Max. Intermittent Speed	Min. Hız Min. Speed	A	B	Giriş Inlet	Çıkış Outlet
Sol / Left	Sağ /Right	(cm³/rev)	(100%)(BAR)	(20 sec.max)(BAR)	(6 sec.max)(BAR)	(RPM)	(RPM)	(RPM)	(mm)	(mm)	C	D
G40063SF815	G40063SF825	63	290	315	325	1800	2700	300	209.5	139	G1"	G3/4"
G40073SF815	G40073SF825	73	280	300	315				213.5	139		
G40087SF815	G40087SF825	87	260	280	290				218.5	144	G1 1/4"	G1"
G40109SF815	G40109SF825	109	250	270	280				226.5	149		
G40116SF815	G40116SF825	116	240	260	270	1500			226.5	149		
G40133SF815	G40133SF825	133	220	250	260		2500		235.5	150	G1 1/2"	
G40151SF815	G40151SF825	151	180	210	220				241.5	153		