KAZEL HYDRAULIC EQUIPMENTS

TECHNICAL DATA

TEKNİK DATALAR

40 SERIES GANI GEAR PUMP

40 SERİSİ GANİ DİŞLİ POMPA

UNI GANI BI-DIRECTIONAL (GLANDED-BD-F4)

UNI GANİ ÇİFT YÖNLÜ (RAKORLU-F4)

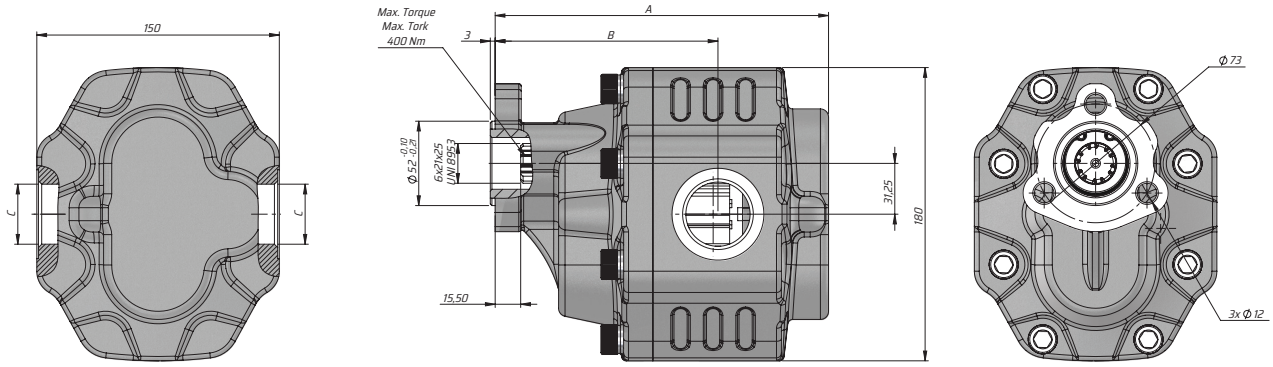

Kod Code	İletim hacmi Displacement	Max. Sürekli Basıncı Max. Continuous pressure	Maks. Aralıklı Basınç Max. Intermittent Pressure	Maks. Anlık Basınç Max. Peak Pressure	Maks. Sürekli Hız Max. Continuous Speed	Maks. Aralıklı Hız Max. Intermittent Speed	Min. Hız Min. Speed	A	B	Giriş Inlet	Çıkış Outlet
Sol/Left	(cm³/rev)	(100%)(BAR)	(20 sec.max)(BAR)	(6 sec.max)(BAR)	(RPM)	(RPM)	(RPM)	(mm)	(mm)	C	C
G40063UF431	63	290	315	325	1800	2700	300	188	127	G1"	
G40073UF431	73	280	300	315				192	127		
G40087UF431	87	260	280	290				197	131		
G40109UF431	109	250	270	280				205	137	G1 1/4"	
G40116UF431	116	240	260	270	1500			205	138.5		
G40133UF431	133	220	250	260		2500		214	138		
G40151UF431	151	180	210	220				220	140.5		