UNI EHASS ÇİFT YÖNLÜ (RAKORLU-F4)

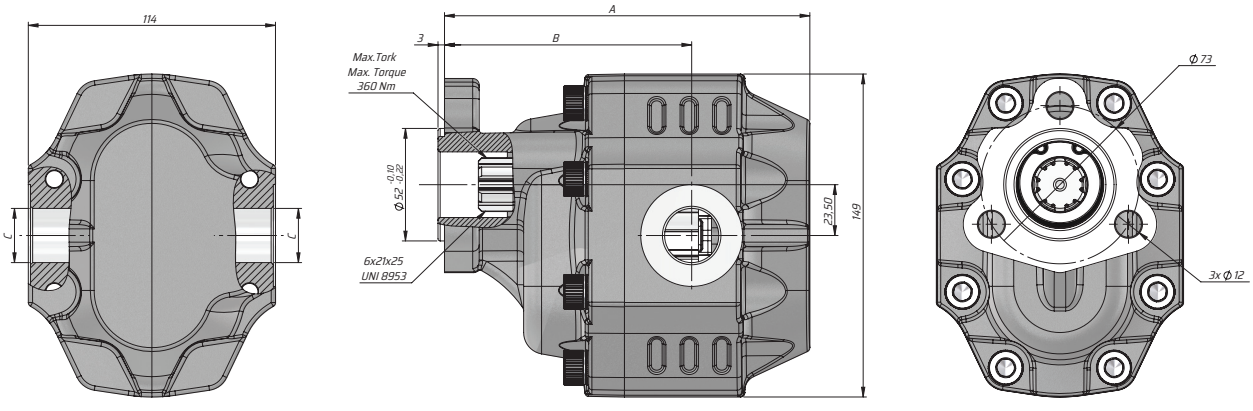

Kod Code	İletim hacmi Displacement	Max. Sürekli Basıncı Max. Continuous pressure	Maks. Aralıklı Basınç Max. Intermittent Pressure	Maks. Anlık Basınç Max. Peak Pressure	Maks. Sürekli Hız Max. Continuous Speed	Maks. Aralıklı Hız Max.Intermittent Speed	Min. Hız Min. Speed	A	B	Giriş Inlet	Çıkış Outlet
BD	(cm³/rev)	(100%)(BAR)	(20 sec.max)(BAR)	(6 sec.max)(BAR)	(RPM)	(RPM)	RPM	(mm)	(mm)	C	C
G30017UF431	17	290	315	325	2500	3000	300	151.5	103	G1/2"	G1/2"
G30022UF431	22							155.5	104.5		
G30027UF431	27							157.5	108		
G30034UF431	34	280	300	310	2200	2800		162.5	109	G3/4"	G3/4"
G30043UF431	43	270	290	300	2000	2500		168.5	114		
G30051UF431	51	240	260	280				173.5	114		
G30061UF431	61	220	240	250	1900			183.5	120.5	G1"	G1"
G30073SF431	73	205	225	230				186.5	123		
G30082UF431	82							192.5	124.5		
G30100UF431	100	180	200	220	1500	1800		205.5	138.5	G1 1/4"	G1 1/4"
G30125UF431	125	160	180	200				221.5	142.5		