30 SERIES EHASS GEAR PUMP

30 SERİSİ EHASS DİŞLİ POMPA

TECHNICAL DATA

TEKNİK DATALAR

KAZEL HYDRAULIC EQUIPMENTS

TRC EHASS BIDIRECTIONAL (GLANDED-F3)

TRC EHASS ÇİFT YÖNLÜ (RAKORLU-F3)

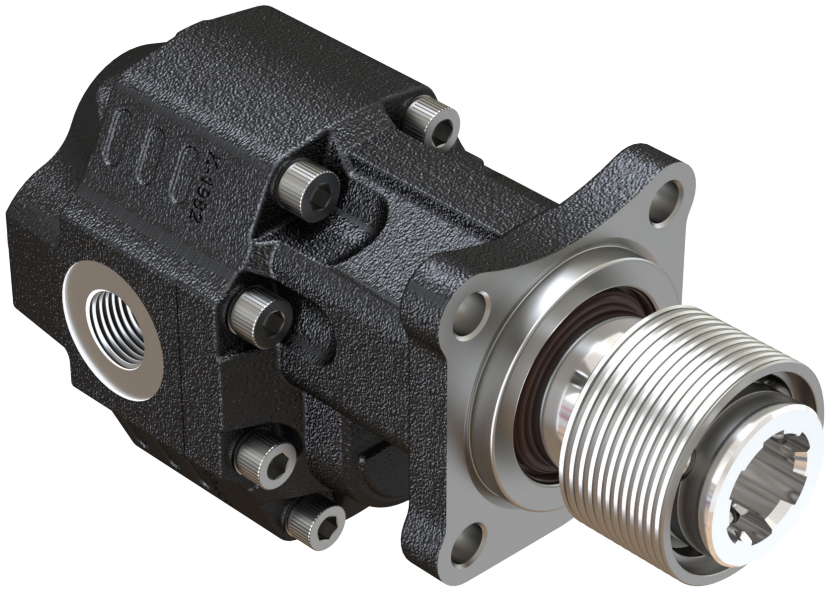

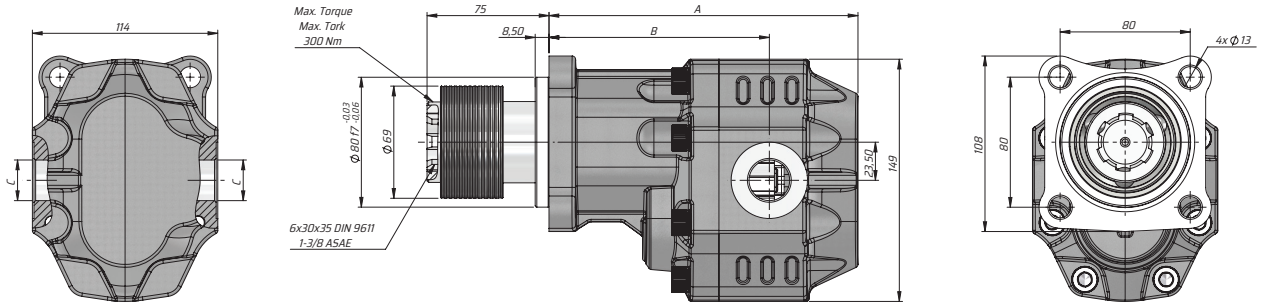

Kod Code	**İletim hacmi** Displacement	**Max. Sürekli Basıncı** Max. Continuous pressure	**Maks. Aralıklı Basınç** Max. Intermittent Pressure	**Maks. Anlık Basınç** Max. Peak Pressure	**Maks. Sürekli Hız** Max. Continuous Speed	**Maks. Aralıklı Hız** Max.Intermittent Speed	**Min. Hız** Min. Speed	**A**	**B**	**Giriş** Inlet	**Çıkış** Outlet
BD	(cm³/rev)	(100%)(BAR)	(20 sec.max)(BAR)	(6 sec.max)(BAR)	(RPM)	(RPM)	RPM	(mm)	(mm)	C	C
G300175F331	17	290	315	325	2500	3000	300	173	124.5	G1/2"	G1/2"
G300225F331	22							177	126		
G300275F331	27							179	129.5		
G300345F331	34	280	300	310	2200	2800		184	130.5	G3/4"	G3/4"
G300435F331	43	270	290	300	2000	2500		190	135.5		
G300515F331	51	240	260	280				195	135.5		
G300615F331	61	220	240	250	1900			205	142	G1"	G1"
G300735F331	73	205	225	230				208	144.5		
G300825F331	82							214	146		
G301005F331	100	180	200	220	1500	1800		227	160	G1 1/4"	G1 1/4"
G301255F331	125	160	180	200				243	164		