30 SERIES EHASS GEAR PUMP

30 SERİSİ EHASS DİŞLİ POMPA

TECHNICAL DATA

TEKNİK DATALAR

KAZEL HYDRAULIC EQUIPMENTS

SAE B EHASS UNIDIRECTIONAL (WITH ADAPTER-F6)

SAE B EHASS TEK YÖNLÜ (ADAPTÖRLÜ-F6)

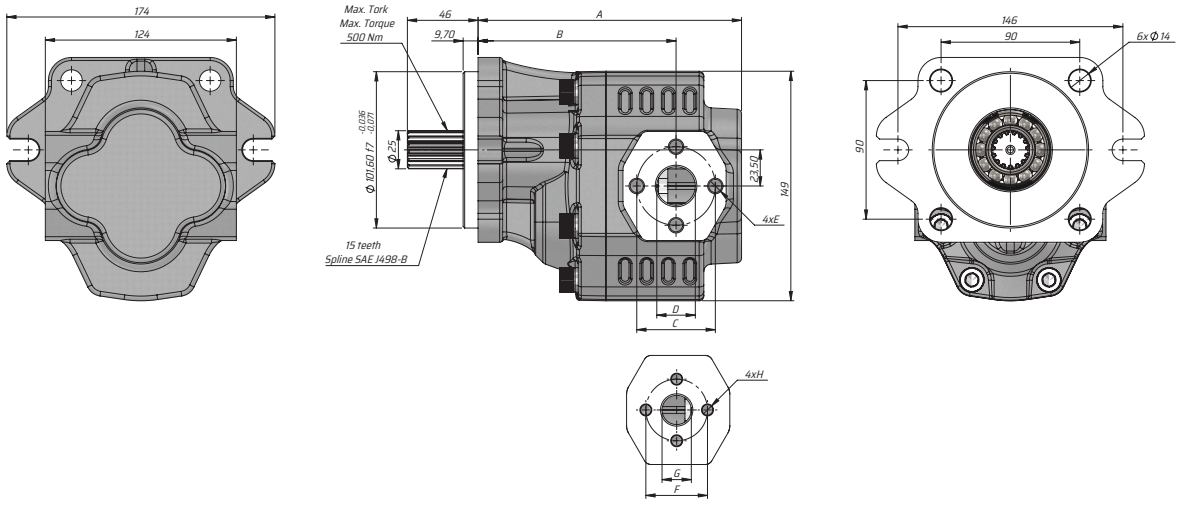

Kod Code		İletim hacmi Displacement	Max. Sürekli Basıncı Max. Continuous pressure	Maks. Aralıklı Basınç Max. Intermittent Pressure	Maks. Anlık Basınç Max. Peak Pressure	Maks. Sürekli Hız Max. Continuous Speed	Maks. Aralıklı Hız Max.Intermittent Speed	Min. Hız Min. Speed	A	B	Giriş Inlet			Çıkış Outlet		
Sol/Left	Sağ/Right	(cm³/rev)	(100%)(BAR)	(20 sec.max)(BAR)	(6 sec.max)(BAR)	(RPM)	(RPM)	(RPM)	(mm)	(mm)	C	D	E	F	G	H
G30022BF612	G30022BF622	22	290	315	325	2500	3000	300	154	118.50	51	25	M10	40	19	M8
G30027BF612	G30027BF622	27							160	118.50						
G30034BF612	G30034BF622	34	280	300	310	2200	2800		165	122.50						
G30043BF612	G30043BF622	43	270	290	300	2000	2500		171	128.50						
G30051BF612	G30051BF622	51	240	260	280				176	125.50						
G30061BF612	G30061BF622	61	220	240	250	1900			184	132.50						
G30082BF612	G30082BF622	82	205	225	230				195	140.50	62	33	M12	51	27	M10