30 SERIES TANDEM GEAR PUMP

30 SERİSİ TANDEM DİŞLİ POMPA

TECHNICAL DATA

TEKNİK DATALAR

KAZEL HYDRAULIC EQUIPMENTS

SAE B EHASS UNIDIRECTIONAL TANDEM (WITH ADAPTER-K1)

SAE B EHASS TEK YÖNLÜ TANDEM (ADAPTÖRLÜ-K1)

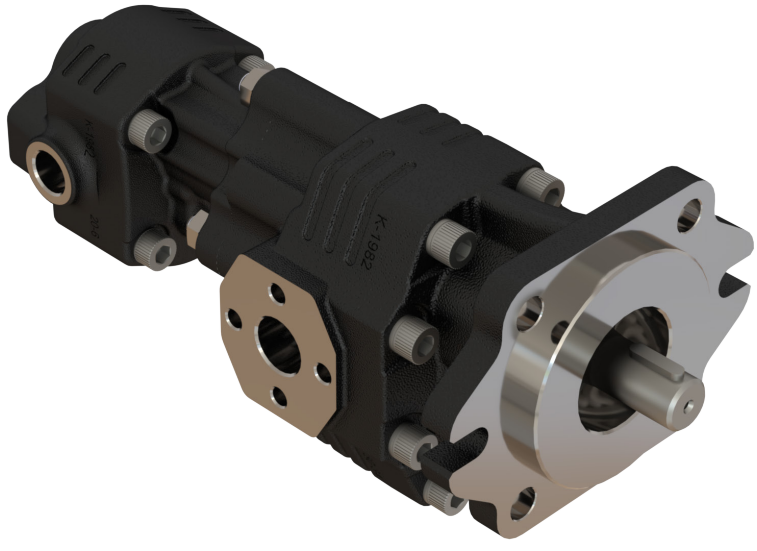

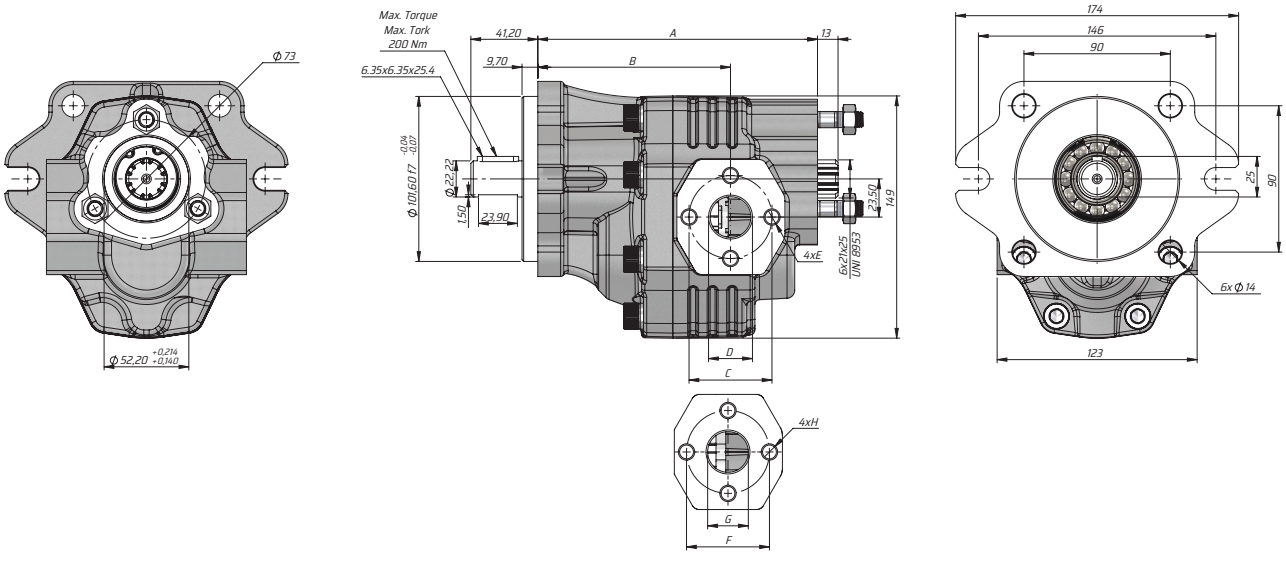

Kod Code		İletim hacmi Displacement	Max. Sürekli Basıncı Max. Continuous pressure	Maks. Aralıklı Basınç Max. Intermittent Pressure	Maks. Anlık Basınç Max. Peak Pressure	Maks. Sürekli Hız Max. Continuous Speed	Maks. Aralıklı Hız Max. Intermittent Speed	Min. Hız Min. Speed	A	B	Giriş Inlet			Çıkış Outlet		
Sol/Left	Sağ/Right	(cm³/rev)	(100%)(BAR)	(20 sec.max)(BAR)	(6 sec.max)(BAR)	(RPM)	(RPM)	(RPM)	(mm)	(mm)	C	D	E	F	G	H
GT30034BK112	GT30034BK122	34	280	300	310	2200	2800	300	172	118,5	51	25	M10	51	25	M10
GT30036BK112	GT30036BK122	36							195							
GT30038BK112	GT30038BK122	38							195							
GT30043BK112	GT30043BK122	43	270	290	300	2000	2500		199,5							