SAE B EHASS TEK YÖNLÜ (RAKORLU-K2)

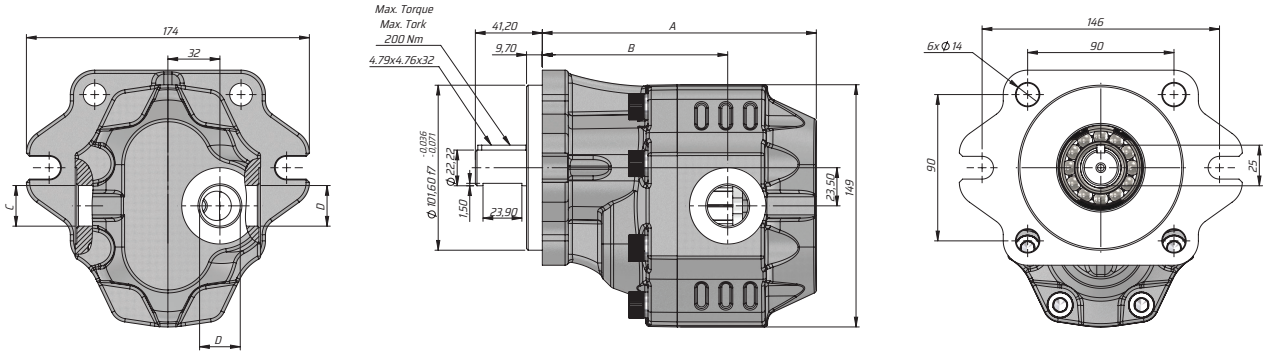

Kod Code		İletim hacmi Displacement	Max. Sürekli Basıncı Max. Continuous pressure	Maks. Aralıklı Basınç Max. Intermittent Pressure	Maks. Anlık Basınç Max. Peak Pressure	Maks. Sürekli Hız Max. Continuous Speed	Maks. Aralıklı Hız Max.Intermittent Speed	Min. Hız Min. Speed	A	B	Giriş Inlet	Çıkış Outlet
Sol/Left	Sağ/Right	(cm³/rev)	(100%)(BAR)	(20 sec.max)(BAR)	(6 sec.max)(BAR)	(RPM)	(RPM)	RPM	(mm)	(mm)	C	D
G30017BK211	G30017BK221	17	290	315	325	2500	3000	300	151.5	103	G1/2"	G1/2"
G30022BK211	G30022BK221	22							155.5	104.5	G3/4"	
G30027BK211	G30027BK221	27							157.5	108		
G30034BK211	G30034BK221	34	280	300	310	2200	2800		162.5	109		G3/4"
G30043BK211	G30043BK221	43	270	290	300	2000	2500		168.5	114		
G30051BK211	G30051BK221	51	240	260	280				173.5	114	G1"	
G30061BK211	G30061BK221	61	220	240	250	1900			183.5	120.5		
G30073BK211	G30073BK221	73	205	225	230				186.5	123	G1 1/4"	G1"
G30082BK211	G30082BK221	82							192.5	124.5	G1 1/4"	G1" G3/4" (Alternative)
G30100BK211	G30100BK221	100	180	200	220	1500	1800		205.5	138.5		
G30125BK211	G30125BK221	125	160	180	200				221.5	142.5		