ISO EHASS TANDEM (RAKORLU-F1)

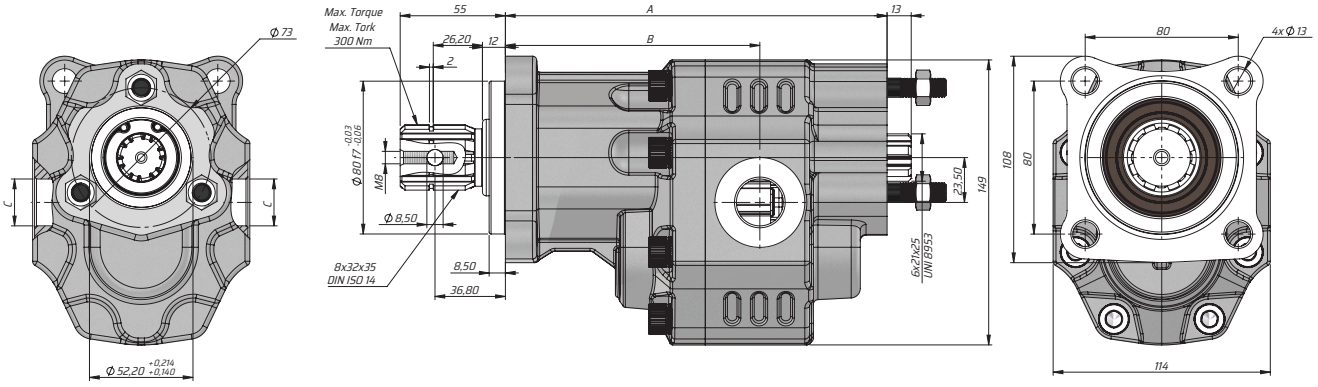

Kod Code	İletim hacmi Displace-ment	Max. Sürekli Basıncı Max. Continuous pressure	Maks. Aralıklı Basınç Max. Intermittent Pressure	Maks. Anlık Basınç Max. Peak Pressure	Maks. Sürekli Hız Max. Continu-ous Speed	Maks. Aralıklı Hız Max.Intermit-tent Speed	Min. Hız Min. Speed	A	B	Giriş Inlet	Çıkış Outlet
BD	(cm³/rev)	(100%)(BAR)	(20 sec.max)(BAR)	(6 sec.max)(BAR)	(RPM)	(RPM)	(RPM)	(mm)	(mm)	C	C
GT30017SF131	17	290	315	325	2500	3000	300	182.5	123.5	G1/2"	G1/2"
GT30022SF131	22							186.5	126.5		
GT30027SF131	27							188.5	126.5		
GT30034SF131	34	280	300	310	2200	2800		193.5	128.5	G3/4"	G3/4"
GT30036SF131	36							193.5	128.5		
GT30038SF131	38							193.5	128.5		
GT30043SF131	43	270	290	300	2000	2500		199.5	133		
GT30051SF131	51	240	260	280				204.5	134.5		
GT30061SF131	61	220	240	250	1800	2000		212.5	138.5	G1"	G1"
GT30073SF131	73	200	220	230	1600	1800		217.5	141		
GT30082SF131	82	190	210	220	1500			223.5	146		
GT30100SF131	100	180	200	220				236.5	160	G1 1/4"	G1 1/4"
GT30125SF131	125	160	180	200				252.5	164		