ISO EHASS ÇİFT YÖNLÜ HYDROMOTOR (RAKORLU-F1)

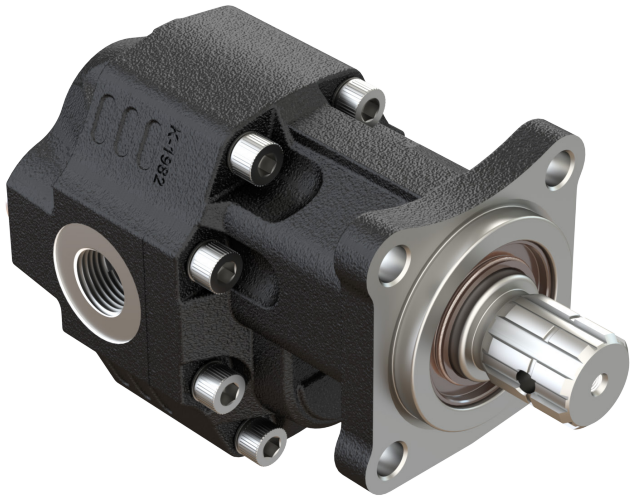

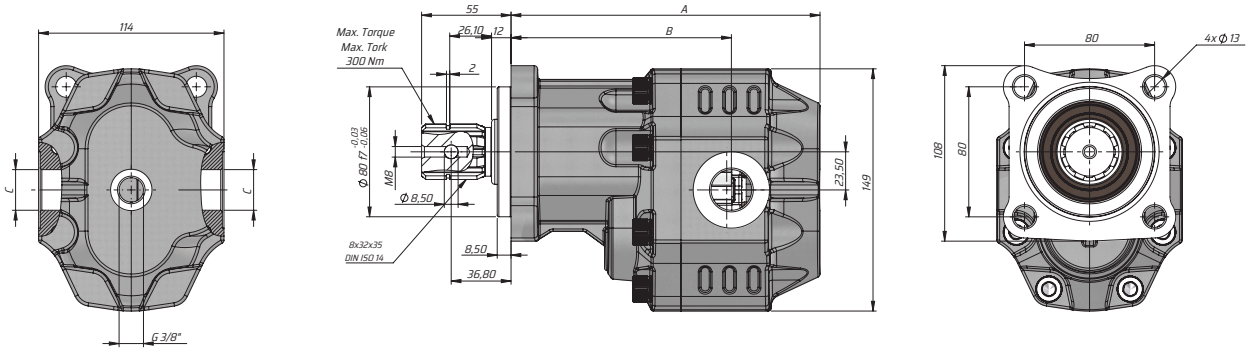

Kod Code	İletim hacmi Displacement	Max. Sürekli Basıncı Max. Continuous pressure	Maks. Aralıklı Basınç Max. Intermittent Pressure	Maks. Anlık Basınç Max. Peak Pressure	Maks. Sürekli Hız Max. Continuous Speed	Maks. Aralıklı Hız Max.Intermittent Speed	Min. Hız Min. Speed	A	B	Giriş Inlet	Çıkış Outlet
BD	(cm³/rev)	(100%)(BAR)	(20 sec.max)(BAR)	(6 sec.max)(BAR)	(RPM)	(RPM)	RPM	(mm)	(mm)	C	C
GM30017SF131	17	290	315	325	2500	3000	300	173	124.5	G1/2"	G1/2"
GM30022SF131	22							177	126		
GM30027SF131	27							179	129.5		
GM30034SF131	34	280	300	310	2200	2800		184	130.5	G3/4"	G3/4"
GM30043SF131	43	270	290	300	2000	2500		190	135.5		
GM30051SF131	51	240	260	280				195	135.5		
GM30061SF131	61	220	240	250	1900			205	142	G1"	G1"
GM30073SF131	73	205	225	230				208	144.5		
GM30082SF131	82							214	146		
GM30100SF131	100	180	200	220	1500	1800		227	160	G1 1/4"	G1 1/4"
GM30125SF131	125	160	180	200				243	164		