KAZEL HYDRAULIC EQUIPMENTS

FEYZ PİSTONLU MOTOR (56-63 CC)

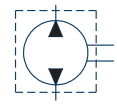

HİDROLİK SEMBOL
HYDRAULIC SYMBOL

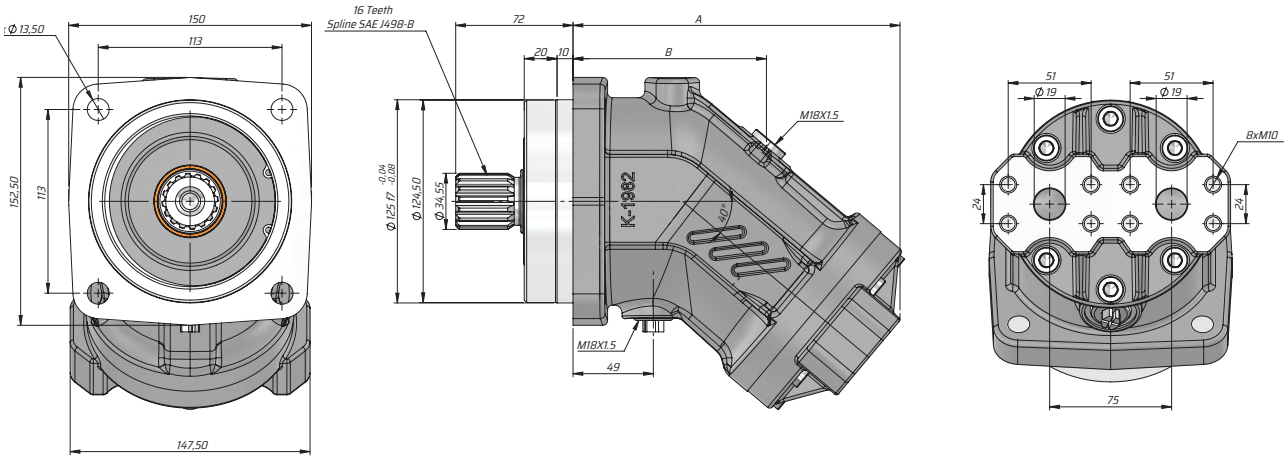

Kod Code	İletim Hacmi Displacement	Maksimum Hız Maxsimum Speed (RPM)		Tork Torque (NM)		Ağırlık Mass	A	B
	(cm³ /rev)	Nom	Max	350 (Bar)	400 (Bar)	Kg	(mm)	(mm)
AM56C2F12433	56	2100	3800	312	350	-	201	119
AM63C2F12433	63	2100	3800	356	400	-	201	119