AKVA GEAR PUMP

**AKVA DİŞLİ POMPA**

TECHNICAL DATA

**TEKNİK DATALAR**

AKVA SEA C TANDEM (WITH ADAPTER-LEFT-F10-K13)

KAZEL HYDRAULIC EQUIPMENTS

# AKVA SEA C TANDEM (ADAPTÖRLÜ-F10-K13)

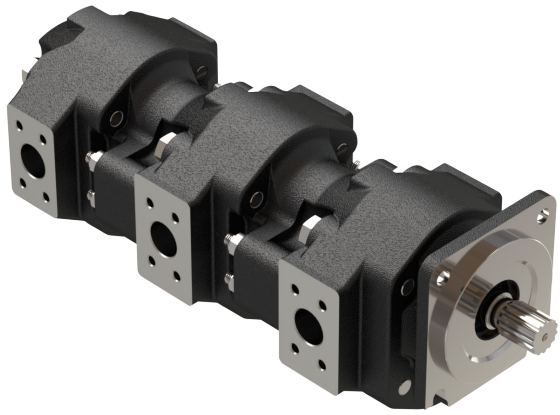

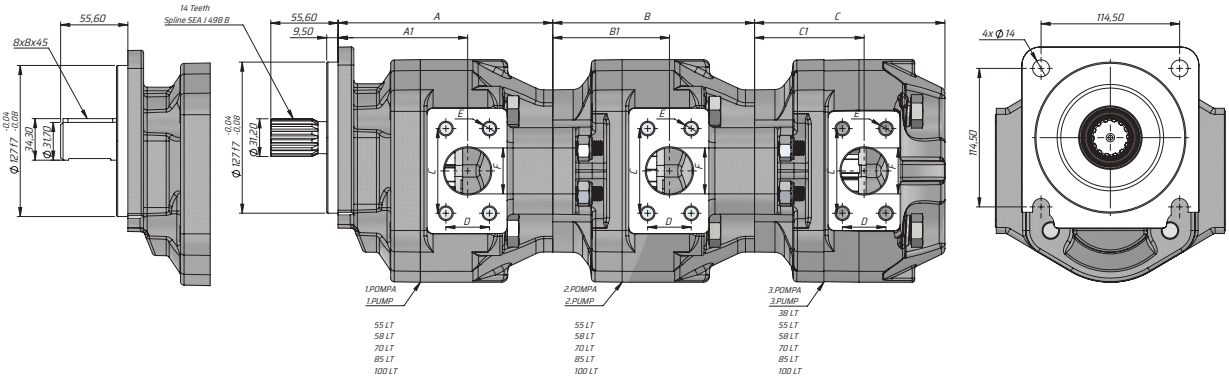


| **İletim Hacmi** Displacement | **Maks. Sürekli Basınç** Max. Continuous Pressure | **Maks. Aralıklı Basınç** Max.Intermittent pressure | **Maks. Anlık Basınç** Max. Peak Pressure | **Maks. Sürekli Hız** Max. Continuous speed | **Maks.Aralıklı Hız** Max. Intermittent speed | **Min. Hız** Min.speed | **A** | **A1** | **B** | **B1** | **C** | **C1** |
|---|---|---|---|---|---|---|---|---|---|---|---|---|
| (cm³/rev) | (100%)(BAR) | (20 sec.max)(BAR) | (6 sec.max)(BAR) | (RPM) | (RPM) | (RPM) | (mm) | (mm) | (mm) | (mm) | (mm) | (mm) |
| 38 | 250 | 270 | 280 | 1500 | 2500 | 300 | - | - | - | - | 157.5 | 90.5 |
| 55 | | | | | | | 177.5 | 106 | 167 | 95.5 | | |
| 58 | | | | | | | | | | | | |
| 70 | | | | | | | 178.5 | 108 | 168 | 97.5 | | |
| 85 | | | | | | | 187.5 | 113.5 | 177 | 103 | 168.5 | 100 |
| 100 | 230 | 250 | 270 | | | | 193.5 | 116.5 | 183 | 106 | 174.5 | 106 |

| **İletim Hacmi** Displacement | **Giriş** Inlet | | | | **Çıkış** Outlet | | | |
|---|---|---|---|---|---|---|---|---|
| (cm³/rev) | C | D | E | F | C | D | E | F |
| 38 | 52.5 | 26 | M10 | 25.4 | 47.6 | 22 | M10 | 19 |
| 55 | 70 | 36 | M12 | 38 | 58.5 | 30 | | 32 |
| 58 | | | | | | | | |
| 70 | | | | | | | | |
| 85 | | | | | | | | |
| 100 | 78 | 43 | | 51 | | | | |